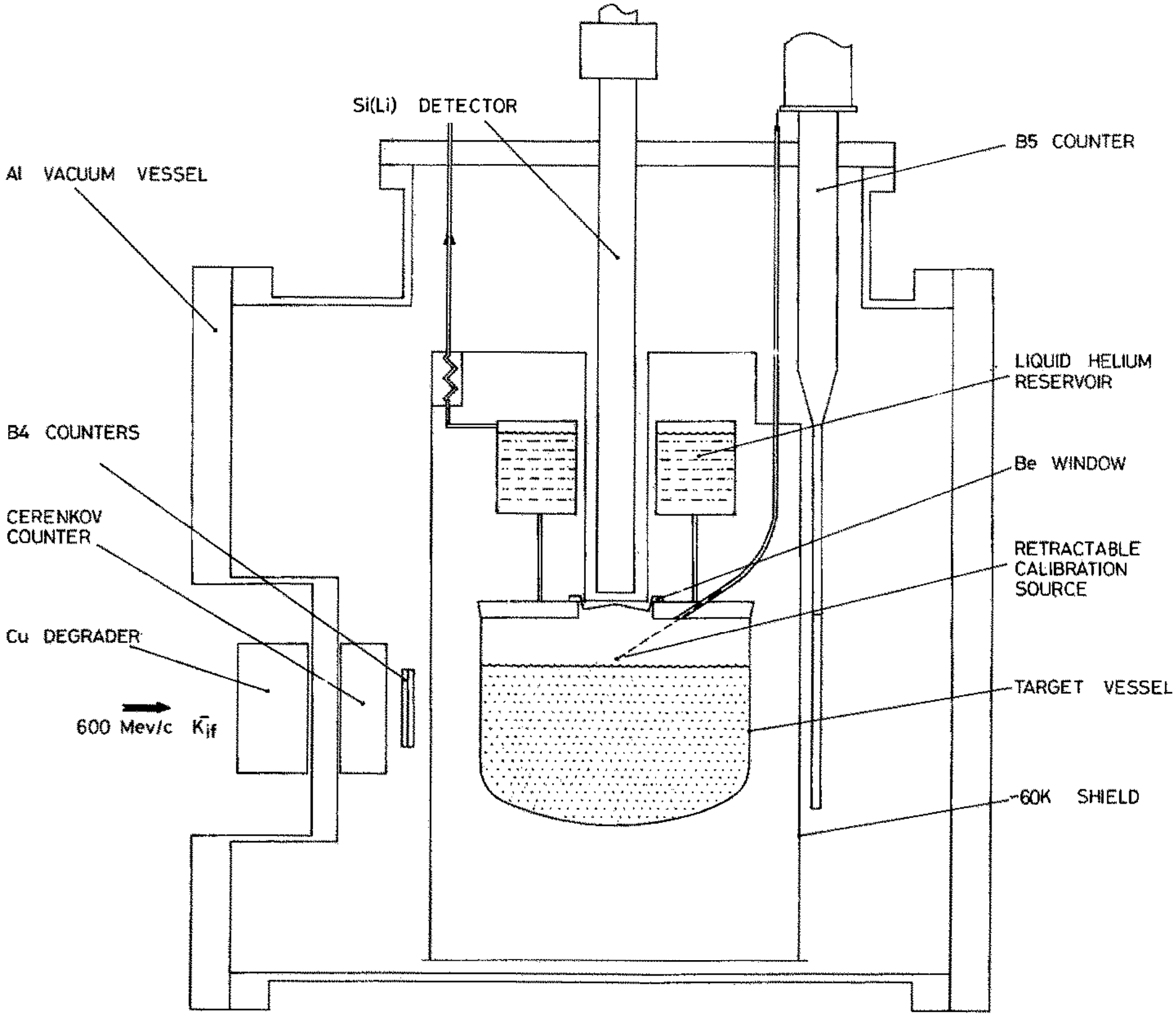
Si(Li) DETECTOR
B5 COUNTER
Al VACUUM VESSEL
LIQUID HELIUM RESERVOIR
B4 COUNTERS
Be WINDOW
CERENKOV COUNTER
RETRACTABLE CALIBRATION SOURCE
Cu DEGRADER
TARGET VESSEL
600 Mev/c K^-_{if}
60K SHIELD